SIMCO ION™
An ITW Company

static control made **Easy!**

soluciones electrostáticas

Product Specifications

Static elimination
Anti-static bars

Performax IQ Easy Ex

The Performax IQ Easy Ex and Performax IQ Easy Ex Speed anti-static bars are designed to neutralise electrostatic charged surfaces and can be used in certain explosion hazardous environments.

Performax IQ Easy Ex anti-static bars are available in two variations:

- Standard, for all applications with a working distance between 100 and 300 mm.
- Speed, for high speed applications with a working distance between 50 and 300 mm.

Features:

- Incorporated high voltage power supply, input voltage 24V DC
- A two color high bright LED visualises bar ON (green) or bar ALARM (red)
- Standard 10 or 20 m cable
- The aluminum profile offers a very rugged structure even up to 3 meters
- Designed for industrial use and easy cleaning; (protection classification IP66)
- Universal mounting brackets are supplied for various mounting options.
- No HV cable in Ex Area
- Complies to the latest standards

Posibility to connect to the IQ Easy platform

It is possible to connect Performax IQ Easy Ex anti-static bars to the IQ Easy platform, this provides the following benefits for you and your end customers:

With the IQ Easy system, you will get the **lowest possible residual static charge at the end of your production process.**

Production failures and production stops will be reduced.

Quality assurance: you can **find back all data and action logs.**

An advantage of the IQ devices instead of the classic static devices is that you will get a warning when there is something wrong with a device so that you can intervene on time. The warnings and alarms will give you the chance to plan the maintenance or replacing of equipment before full break down. So **no surprise machine stops due to defective static control equipment anymore!**

The IQ Easy system will provide optimum settings for the devices to **ensure maximum neutralisation efficiency**

4 years warranty on all 24V products

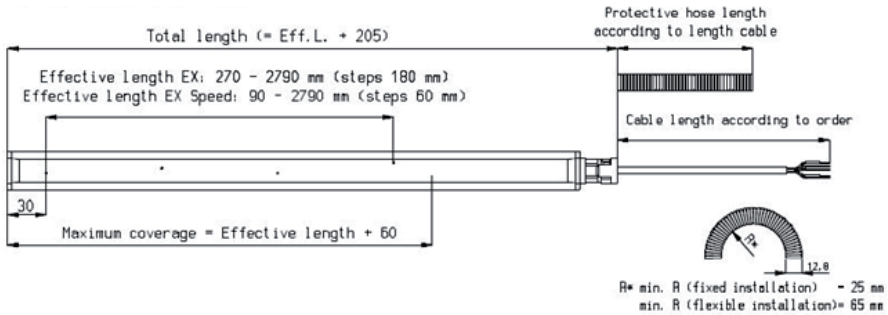

Technical drawing Performax IQ Easy Ex (Speed) with PA protective hose

Technical specifications

Working distance	Performax IQ Easy Ex: 100-300 mm Performax IQ Easy Ex speed: 50-300 mm
Material speed	Performax IQ Easy Ex: 0 – 500 m/min Performax IQ Easy Ex Speed: >500 m/min
Housing material	Aluminium / PA6 / PUR
Emitter pins	Special alloy
Cable	Low voltage cable 5x 0,35mm^2
Weight	2,2 kg/m
Ambient temperature	0-40°C
Use circumstances	Industrial
U primairy	24 V DC, <0,5 A
Protection classification	IP66
Suitable power unit	Integrated, 24V DC voltage input
Indication	Hight bright LED green/red
2-color LED	Continuous / Flashing Green: In Operation / Standby Red: Overload / No communication
Ex approval	ATEX II 2 GD Ex mb IIB T4 Gb Ex mb IIIB T135°C Db

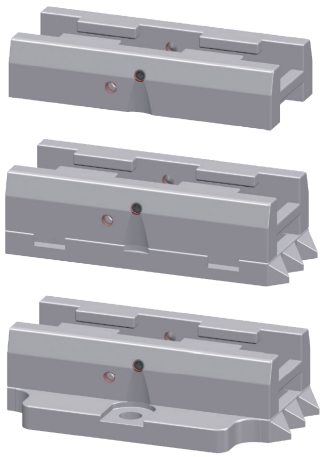

Universal mounting brackets are standard supplied

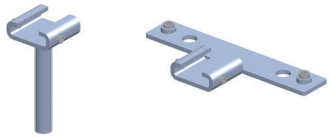

Optional, metal mounting brackets available

The bar is connected via the status module that contains the required fuse and also displays status information outside the Ex zone.

Simco-Ion Netherlands

Postbus 71
Lochem, The Netherlands NL-7240 AB

Tel: +31 (0)573 288333
Fax: +31 (0)573 257319

general@simco-ion.nl
www.simco-ion.nl