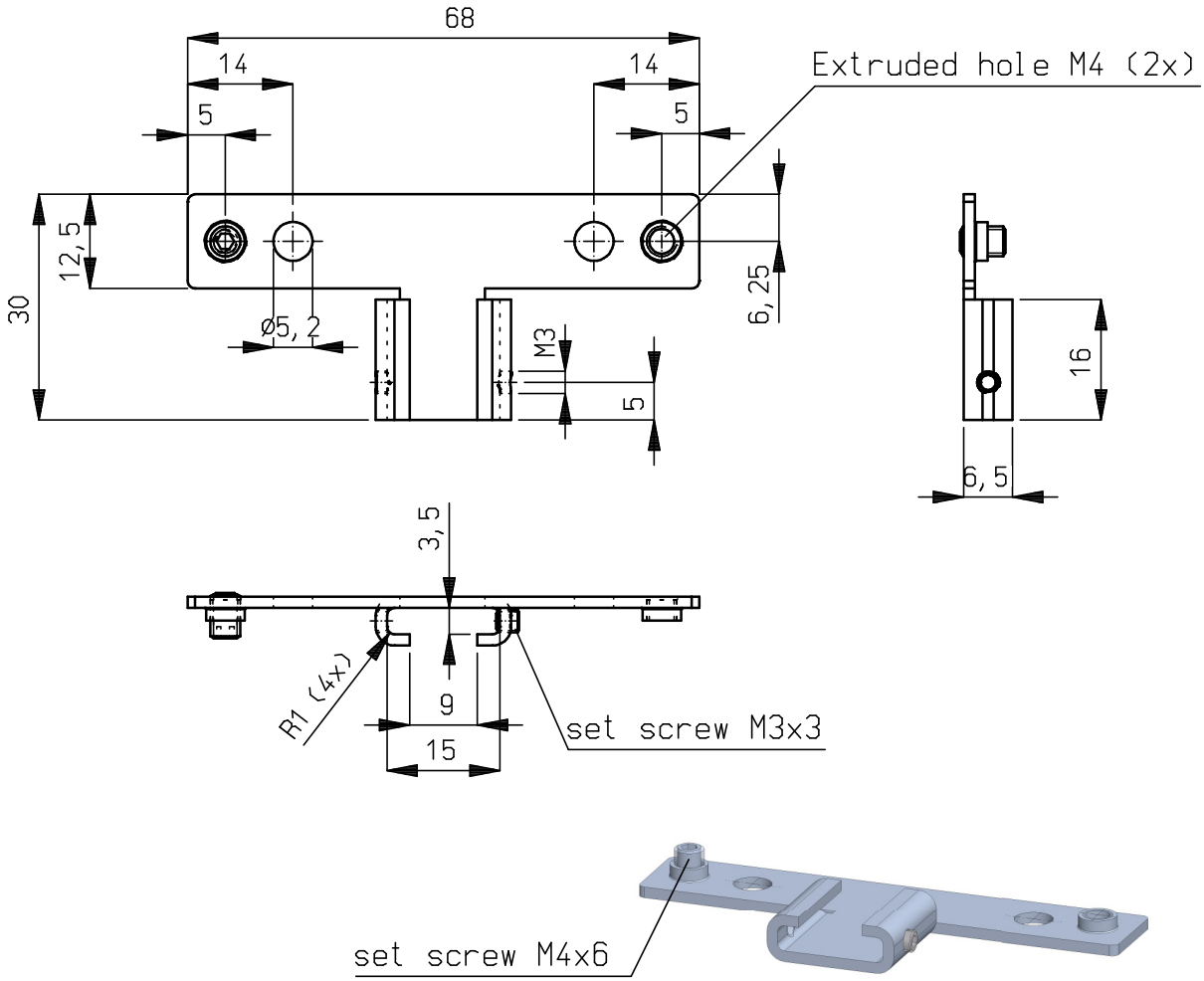
soluciones
electrostáticas



Material: - stainless steel 304, plate 1,5 mm
- stainless steel set screw M4x6, DIN913
- stainless steel set screw M3x3, DIN913

Remove burrs and sharp edges.

| | | |